# Digital Electronic Circuits (EC2L004)

Lecture 12: Flip-Flops

# Learning Objectives

- Flip-Flops
  - S-R/J-K/D/T
    - Truth tables
    - Characteristic Equations
    - Excitation tables
    - State Diagram
- Flip-Flops with Asynchronous Inputs
- Conversion among Flip-Flops

# S-R Flip-Flop

- Characteristic Table

| *S* | *R* | *CLK* | *Q(t+1)* | Comments |
|---|---|---|---|---|
| 0 | 0 | X | *Q(t)* | No change |
| 0 | 1 | ↑ | 0 | Reset |
| 1 | 0 | ↑ | 1 | Set |
| 1 | 1 | ↑ | ? | Invalid |

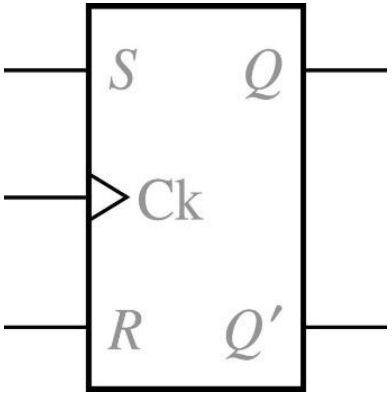


**X = irrelevant ("don't care")**

**↑ = clock transition LOW to HIGH**

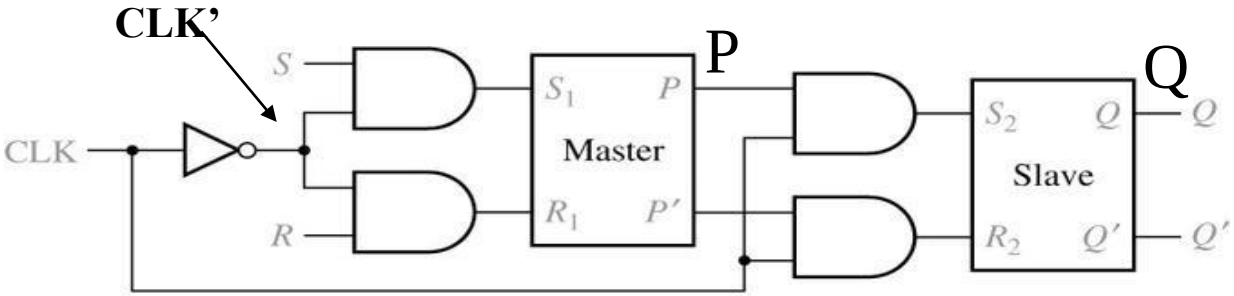


(a) Implementation with two latches

# S-R Flip-Flop…Cont'd

- Characteristic Equation:

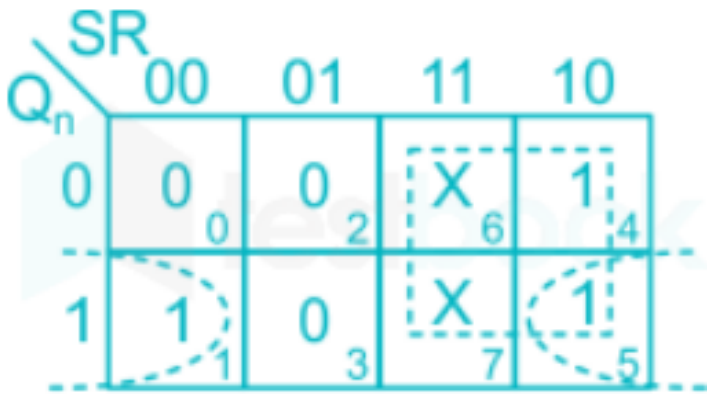


$$Q_{n+1} = S + \bar{R}\, Q_n$$

| S | R | $Q_n$ | $Q_{n+1}$ |
|---|---|---|---|
| 0 | 0 | 0 | 0 |
| 0 | 0 | 1 | 1 |
| 0 | 1 | 0 | 0 |
| 0 | 1 | 1 | 0 |
| 1 | 0 | 0 | 1 |
| 1 | 0 | 1 | 1 |
| 1 | 1 | 0 | X |
| 1 | 1 | 1 | X |

# S-R Flip-Flop…Cont'd

- Excitation Table:

For a given combination of present state $Q_n$ and next state $Q_{n+1}$, excitation table tell the inputs required.

| $Q_n$ | $Q_{n+1}$ | S | R |
|---|---|---|---|
| 0 | 0 | 0 | X |
| 0 | 1 | 1 | 0 |
| 1 | 0 | 0 | 1 |
| 1 | 1 | X | 0 |

# S-R Flip-Flop…Cont'd

- State Diagram: The state graph or state diagram is a pictorial representation of the relationships between the present state, the input state, the next state, and the output state of a sequential circuit.

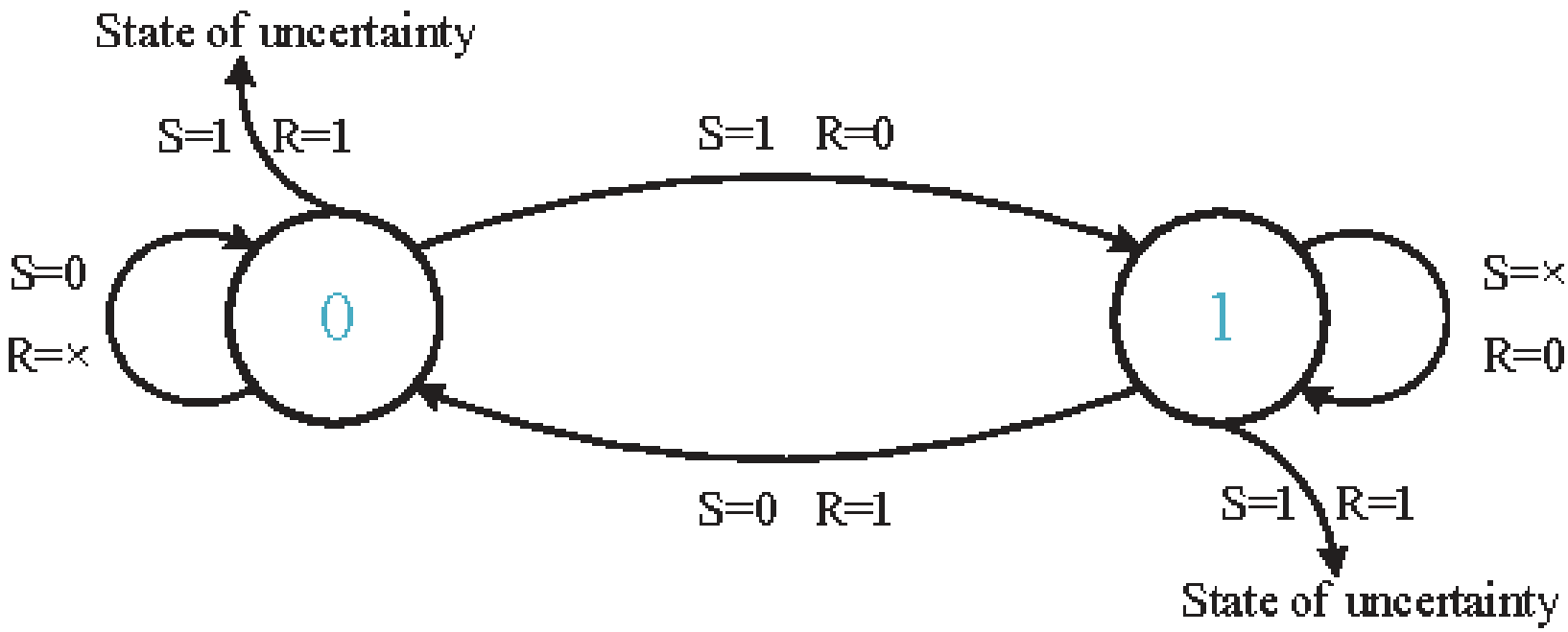

# J-K Flip-Flop

- Characteristic Table

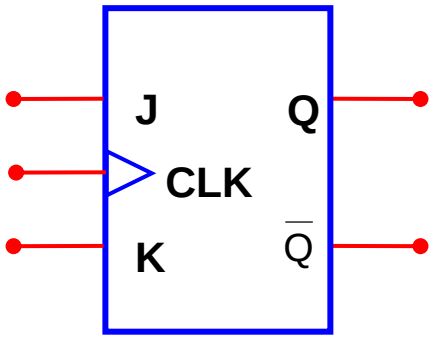


| J | K | CLK | Q | |
|---|---|---|---|---|
| 0 | 0 | ↑ | $Q_0$ | No Change |
| 0 | 1 | ↑ | 0 | Clear |
| 1 | 0 | ↑ | 1 | Set |
| 1 | 1 | ↑ | $\overline{Q}_0$ | Toggle |

↑ : Rising Edge of Clock

$\overline{Q}$ : Complement of Q

# J-K Flip-Flop…Cont'd

- Characteristic Equation:

| J | K | $Q_n$ (Present State) | $Q_{n+1}$ (Next State) |
|---|---|---|---|
| 0 | 0 | 0 | 0 |
| 0 | 0 | 1 | 1 |
| 0 | 1 | 0 | 0 |
| 0 | 1 | 1 | 0 |
| 1 | 0 | 0 | 1 |
| 1 | 0 | 1 | 1 |
| 1 | 1 | 0 | 1 |
| 1 | 1 | 1 | 0 |

$$Q_{n+1} = Q'_n J + Q_n K'$$

# J-K Flip-Flop…Cont'd

- Excitation Table:

| $Q_n$ | $Q_{n+1}$ | J | K |
|---|---|---|---|
| 0 | 0 | 0 | X |
| 0 | 1 | 1 | X |
| 1 | 0 | X | 1 |
| 1 | 1 | X | 0 |

# J-K Flip-Flop…Cont'd

- Sate Diagram

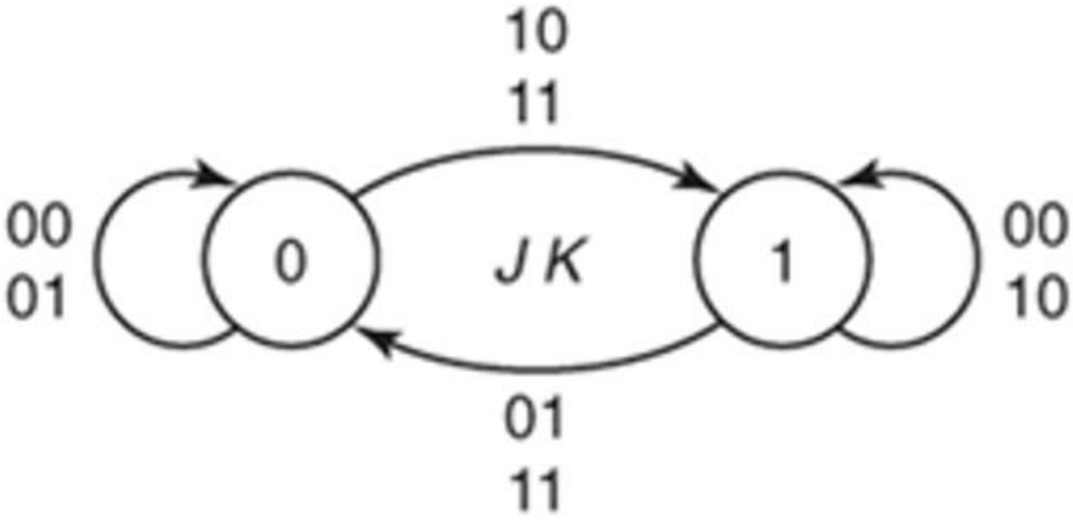

# D Flip-Flop

- Characteristic Table

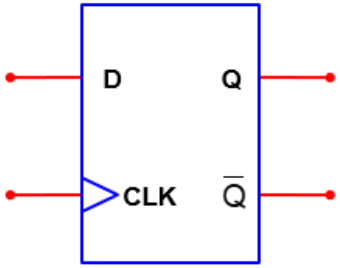


| D | CLK | Q | $\overline{Q}$ |
|---|---|---|---|
| 0 | ↑ | 0 | 1 |
| 1 | ↑ | 1 | 0 |

↑ : Rising Edge of Clock

Positive Edge Trigger

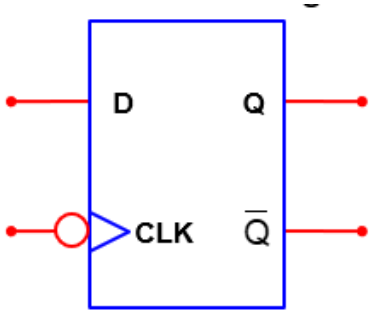


| D | CLK | Q | $\overline{Q}$ |
|---|---|---|---|
| 0 | ↓ | 0 | 1 |
| 1 | ↓ | 1 | 0 |

↓ : Falling Edge of Clock

Negative Edge Trigger

# D Flip-Flop…Cont'd

- Characteristic Equation

- Excitation Table

| Q | $Q_{next}$ | D |
|---|---|---|
| 0 | 0 | 0 |
| 1 | 0 | 0 |
| 0 | 1 | 1 |
| 1 | 1 | 1 |

- State Diagram

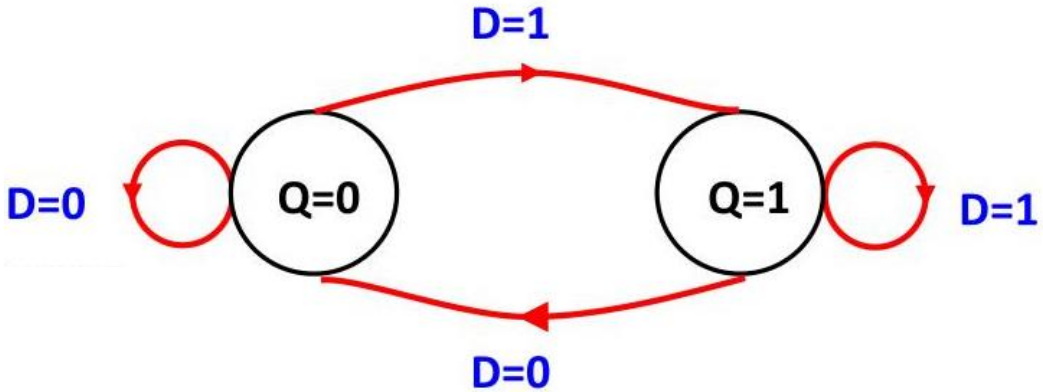

# T Flip-Flop

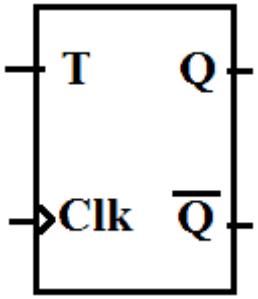


- Characteristic Table

| T | $Q_{next}$ |
|---|---|
| 0 | Q |
| 1 | $\overline{Q}$ |

- Characteristic Equation

$$Q_{n+1} = T Q_n' + T' Q_n$$

$$= T \oplus Q_n$$

- Excitation Table

| Q | $Q_{next}$ | T |
|---|---|---|
| 0 | 0 | 0 |
| 1 | 0 | 1 |
| 0 | 1 | 1 |
| 1 | 1 | 0 |

- State Diagram

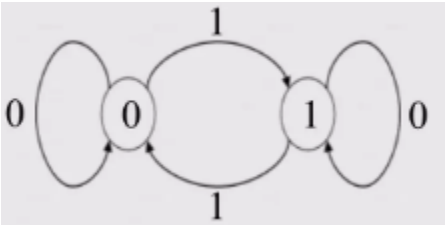

# Direct Inputs

- Asynchronous inputs (Preset & Clear) are used to override the clock/data inputs and force the outputs to a predefined state.

- The Preset (PR) input forces the output to: $Q = 1$ & $\overline{Q} = 0$
  - Preset is also known as *set* or *direct set*

- The Clear (CLR) input forces the output to: $Q = 0$ & $\overline{Q} = 1$
  - Clear pin is also known as *reset* or *direct reset*

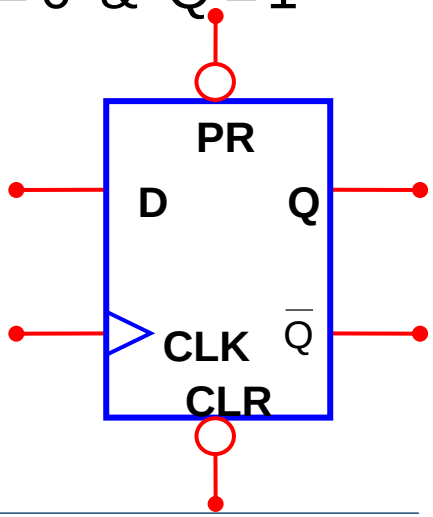

# Direct Inputs…Cont'd

| PR PRESET | CLR CLEAR | CLK CLOCK | D DATA | Q | $\overline{Q}$ | |
|---|---|---|---|---|---|---|
| 1 | 1 | ↑ | 0 | 0 | 1 | |
| 1 | 1 | ↑ | 1 | 1 | 0 | |
| 0 | 1 | X | X | 1 | 0 | Asynchronous Preset |
| 1 | 0 | X | X | 0 | 1 | Asynchronous Clear |
| 0 | 0 | X | X | 1 | 1 | ILLEGAL CONDITION |

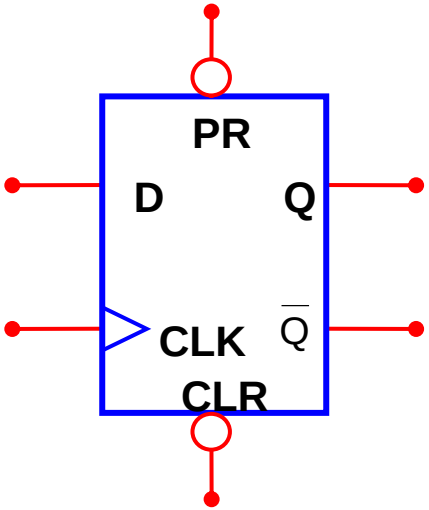


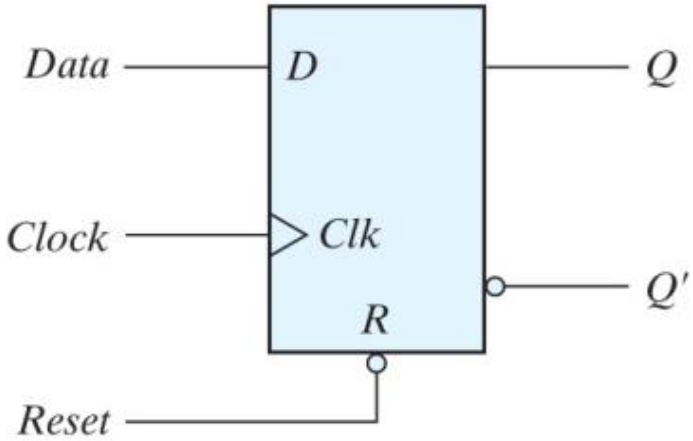


(b) Graphic symbol

| R | Clk | D | Q | Q' |
|---|---|---|---|---|
| 0 | X | X | 0 | 1 |
| 0 | ↑ | 0 | 0 | 1 |
| 0 | ↑ | 1 | 1 | 0 |

(b) Function table

# Flip-Flops & Latches

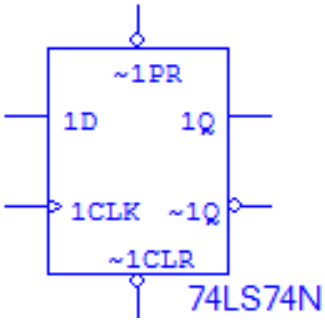


74LS74
Dual Positive-Edge-Triggered D Flip-Flops with Preset, Clear, and Complementary Outputs

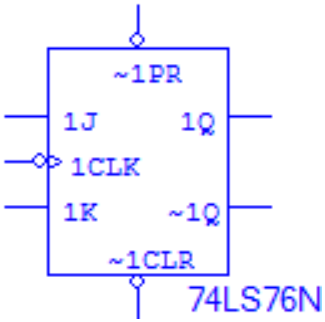


74LS76
Dual Negative-Edge-Triggered J-K Flip-Flops with Preset, Clear, and Complementary Outputs

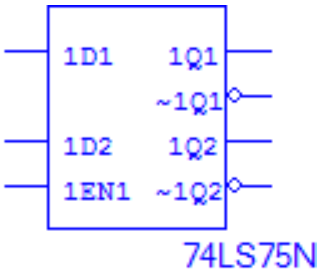


74LS75
Quad Latch

# Conversion: Flip-Flops

# J-K FF to D-FF

- Step-1: Write the truth table of the desired FF

| Input | Outputs | |
|---|---|---|
| D | $Q_n$ | $Q_{n+1}$ |
| 0 | 0 | 0 |
| 0 | 1 | 0 |
| 1 | 0 | 1 |
| 1 | 1 | 1 |

- Step-2: Obtain the excitation table for the given FF from its truth table

| Outputs | | Inputs | |
|---|---|---|---|
| $Q_n$ | $Q_{n+1}$ | J | K |
| 0 | 0 | 0 | X |
| 0 | 1 | 1 | X |
| 1 | 0 | X | 1 |
| 1 | 1 | X | 0 |

# J-K FF to D-FF…Cont'd

- Step-3: Obtain the conversion table

| D | $Q_n$ | $Q_{n+1}$ | J | K |
|---|---|---|---|---|
| 0 | 0 | 0 | 0 | X |
| 0 | 1 | 0 | X | 1 |
| 1 | 0 | 1 | 1 | X |
| 1 | 1 | 1 | X | 0 |

- Step-4: Simplify the Expressions for the Inputs of the given Flip-Flop

| D \ $Q_n$ | 0 | 1 |
|---|---|---|
| 0 | $0^{0}$ | $X^{1}$ |
| 1 | $1^{2}$ | $X^{3}$ |

$J = D$

| D \ $Q_n$ | 0 | 1 |
|---|---|---|
| 0 | $X^{0}$ | $1^{1}$ |
| 1 | $X^{2}$ | $0^{3}$ |

$K = \overline{D}$

# J-K FF to D-FF…Cont'd

- Step-5: Design the Necessary Circuit and make the Connections accordingly

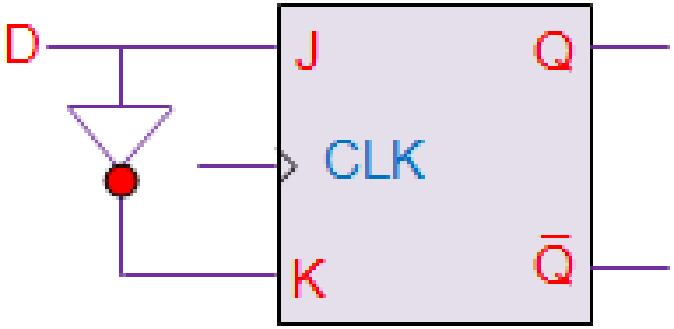

# J-K FF to T-FF

| T | $Q_n$ | $Q_{n+1}$ | J | K |
|---|---|---|---|---|
| 0 | 0 | 0 | 0 | X |
| 0 | 1 | 1 | X | 0 |
| 1 | 0 | 1 | 1 | X |
| 1 | 1 | 0 | X | 1 |

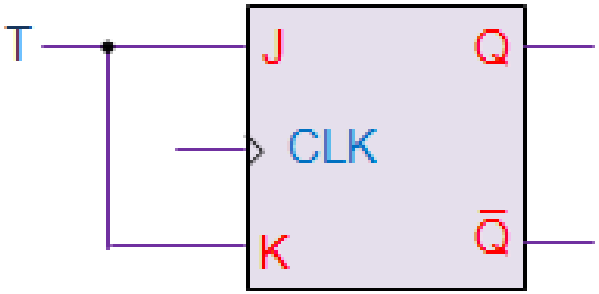

# S-R FF to J-K FF

| J | K | $Q_n$ | $Q_{n+1}$ | S | R |
|---|---|---|---|---|---|
| 0 | 0 | 0 | 0 | 0 | X |
| 0 | 0 | 1 | 1 | X | 0 |
| 0 | 1 | 0 | 0 | 0 | X |
| 0 | 1 | 1 | 0 | 0 | 1 |
| 1 | 0 | 0 | 1 | 1 | 0 |
| 1 | 0 | 1 | 1 | X | 0 |
| 1 | 1 | 0 | 1 | 1 | 0 |
| 1 | 1 | 1 | 0 | 0 | 1 |

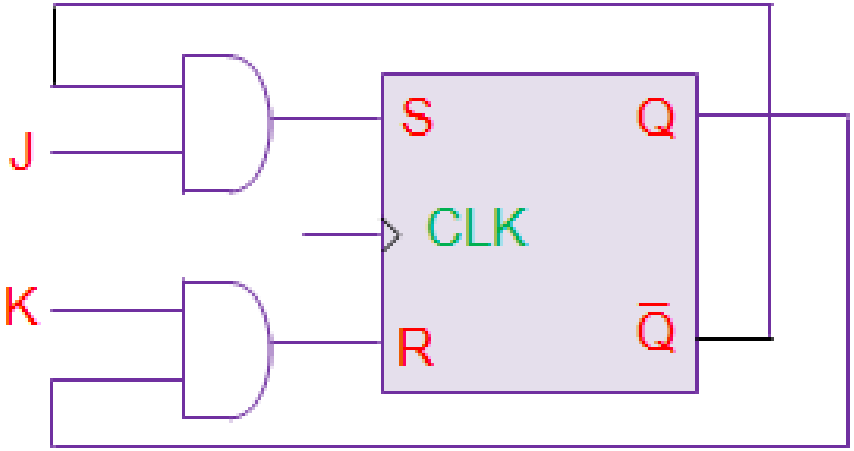

# S-R FF to D FF

| D | $Q_n$ | $Q_{n+1}$ | S | R |
|---|---|---|---|---|
| 0 | 0 | 0 | 0 | X |
| 0 | 1 | 0 | 0 | 1 |
| 1 | 0 | 1 | 1 | 0 |
| 1 | 1 | 1 | X | 0 |

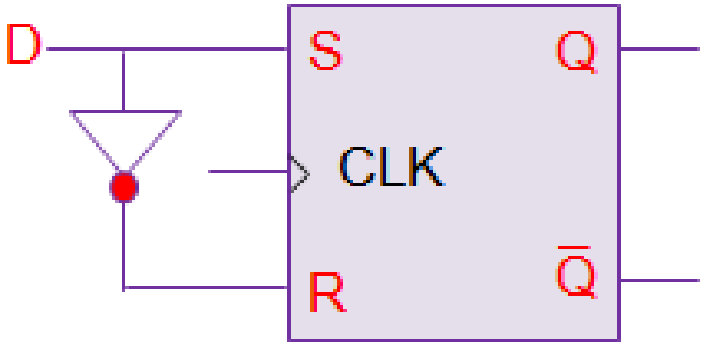

# S-R FF to T FF

| T | $Q_n$ | $Q_{n+1}$ | S | R |
|---|---|---|---|---|
| 0 | 0 | 0 | 0 | X |
| 0 | 1 | 1 | X | 0 |
| 1 | 0 | 1 | 1 | 0 |
| 1 | 1 | 0 | 0 | 1 |

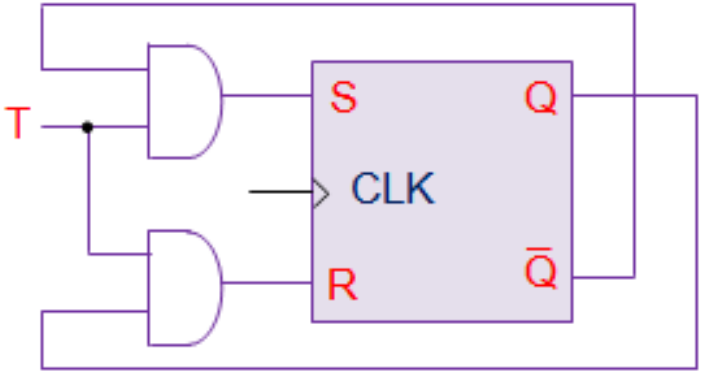

# D-FF to J-K FF

| J | K | $Q_n$ | $Q_{n+1}$ | D |
|---|---|---|---|---|
| 0 | 0 | 0 | 0 | 0 |
| 0 | 0 | 1 | 1 | 1 |
| 0 | 1 | 0 | 0 | 0 |
| 0 | 1 | 1 | 0 | 0 |
| 1 | 0 | 0 | 1 | 1 |
| 1 | 0 | 1 | 1 | 1 |
| 1 | 1 | 0 | 1 | 1 |
| 1 | 1 | 1 | 0 | 0 |

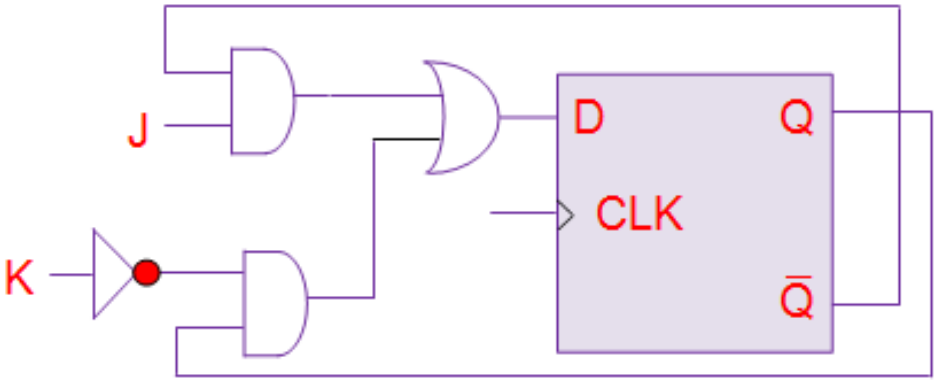

# D-FF to S-R FF

| S | R | $Q_n$ | $Q_{n+1}$ | D |
|---|---|---|---|---|
| 0 | 0 | 0 | 0 | 0 |
| 0 | 0 | 1 | 1 | 1 |
| 0 | 1 | 0 | 0 | 0 |
| 0 | 1 | 1 | 0 | 0 |
| 1 | 0 | 0 | 1 | 1 |
| 1 | 0 | 1 | 1 | 1 |
| 1 | 1 | invalid | | X |
| 1 | 1 | invalid | | X |

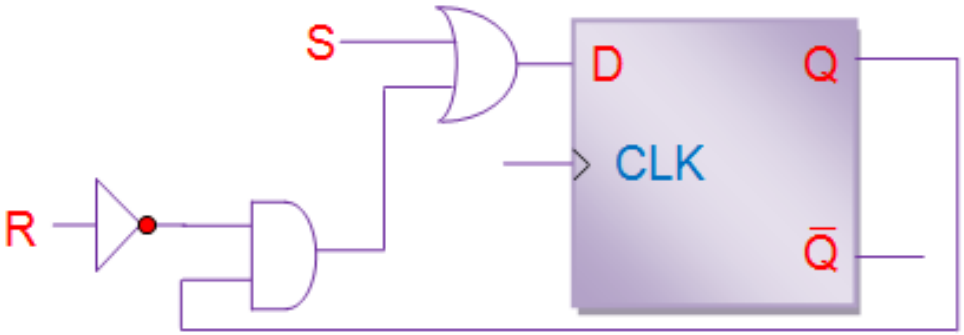

# D-FF to T- FF

| T | $Q_n$ | $Q_{n+1}$ | D |
|---|---|---|---|
| 0 | 0 | 0 | 0 |
| 0 | 1 | 1 | 1 |
| 1 | 0 | 1 | 1 |
| 1 | 1 | 0 | 0 |

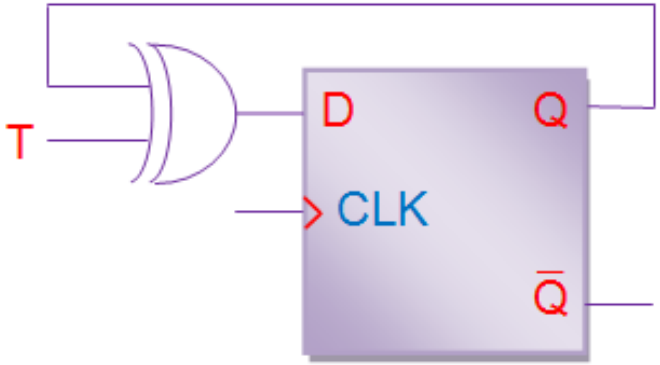

# T-FF to JK- FF

| J | K | $Q_n$ | $Q_{n+1}$ | T |
|---|---|---|---|---|
| 0 | 0 | 0 | 0 | 0 |
| 0 | 0 | 1 | 1 | 0 |
| 0 | 1 | 0 | 0 | 0 |
| 0 | 1 | 1 | 0 | 1 |
| 1 | 0 | 0 | 1 | 1 |
| 1 | 0 | 1 | 1 | 0 |
| 1 | 1 | 0 | 1 | 1 |
| 1 | 1 | 1 | 0 | 1 |

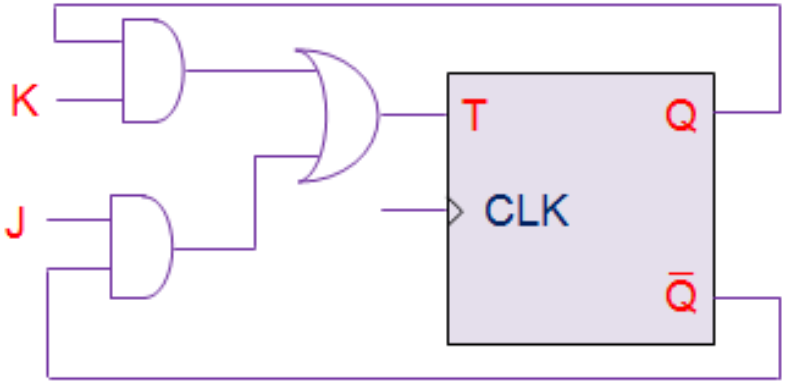

# T-FF to D-FF

| D | $Q_n$ | $Q_{n+1}$ | T |
|---|---|---|---|
| 0 | 0 | 0 | 0 |
| 0 | 1 | 0 | 1 |
| 1 | 0 | 1 | 1 |
| 1 | 1 | 1 | 0 |

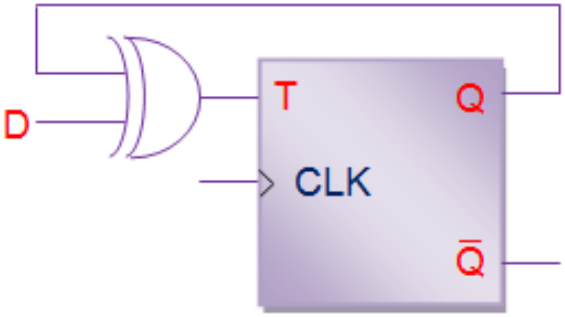

- Disclaimer: Many figures are copied from different open sources on the internet, and I do not claim the ownership of these figures.

**Thank you!!!**